HUSSMANN

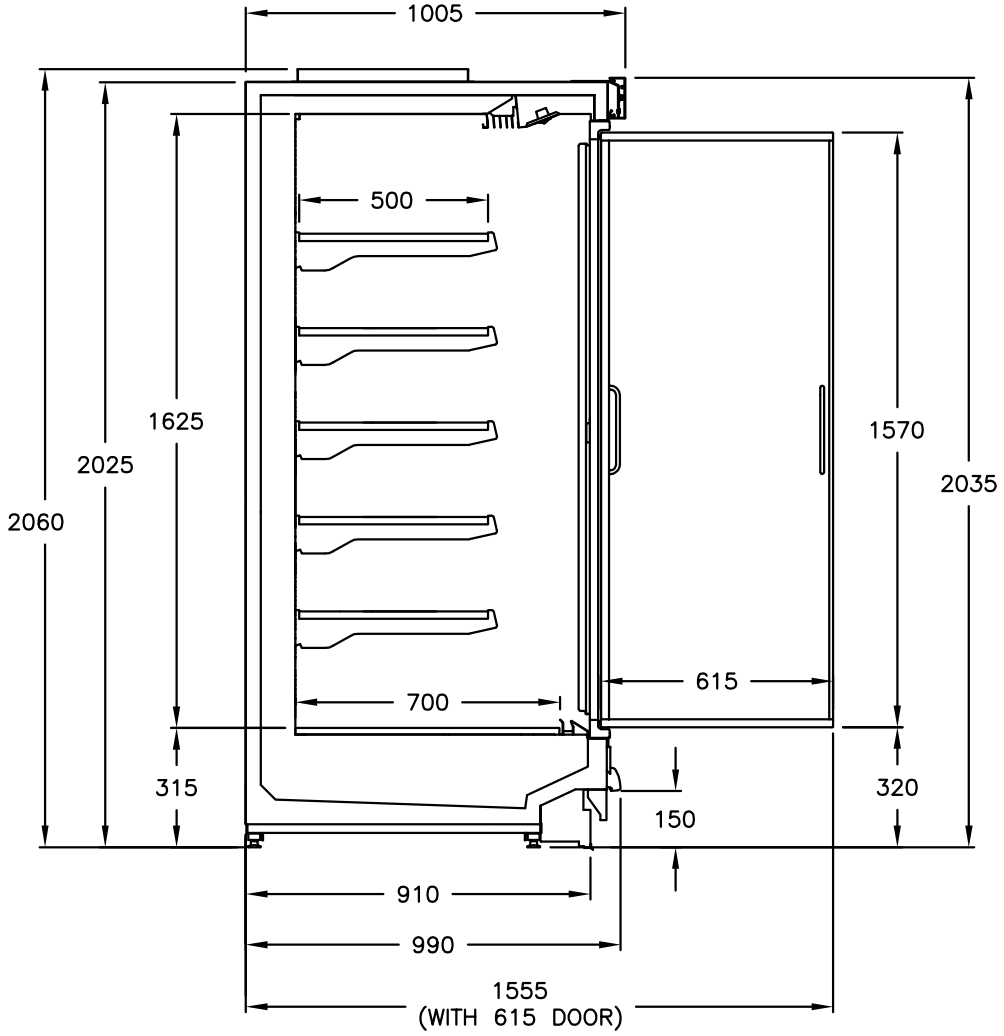


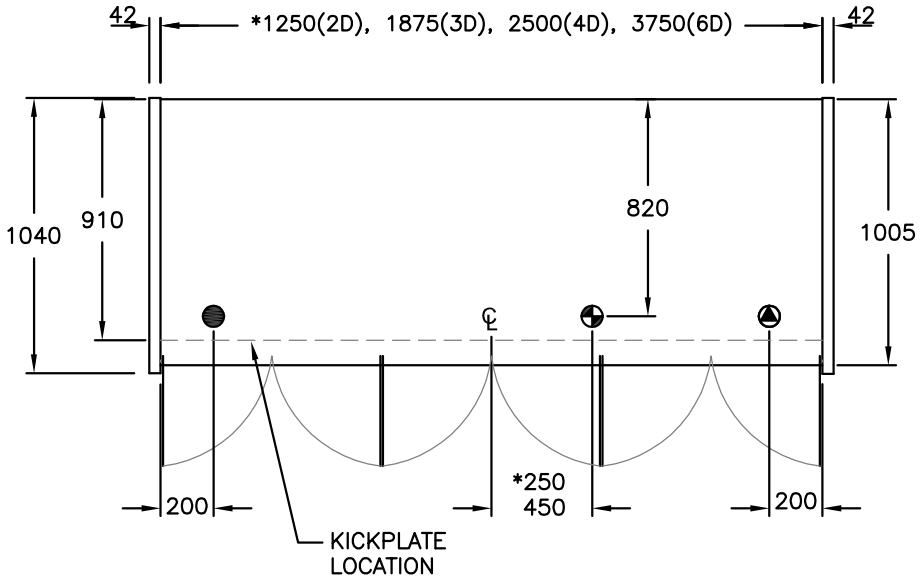


DRAIN
E ELECTRICAL
R REFRIGERATION

MODEL
MPD216

REFERENCE
MULTIDECK DAIRY DOOR

JANUARY 2020