HUSSMANN

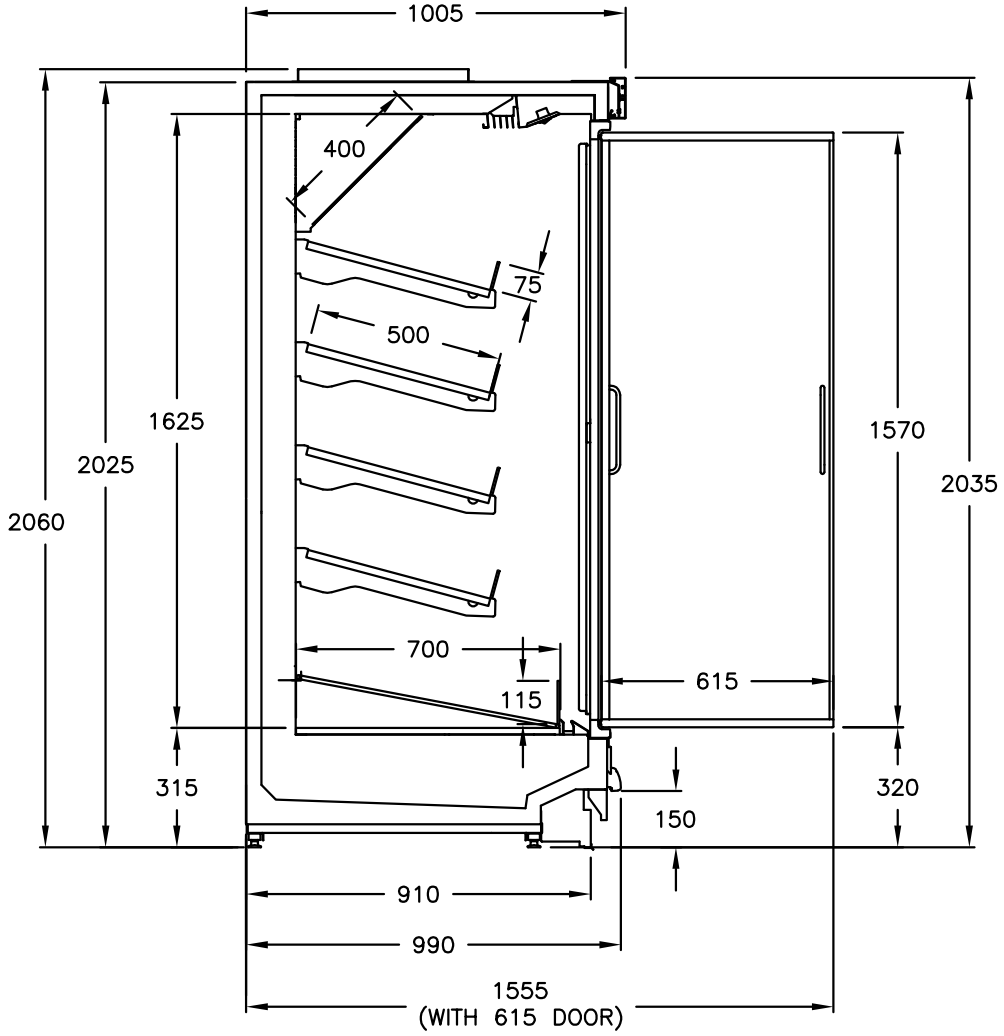

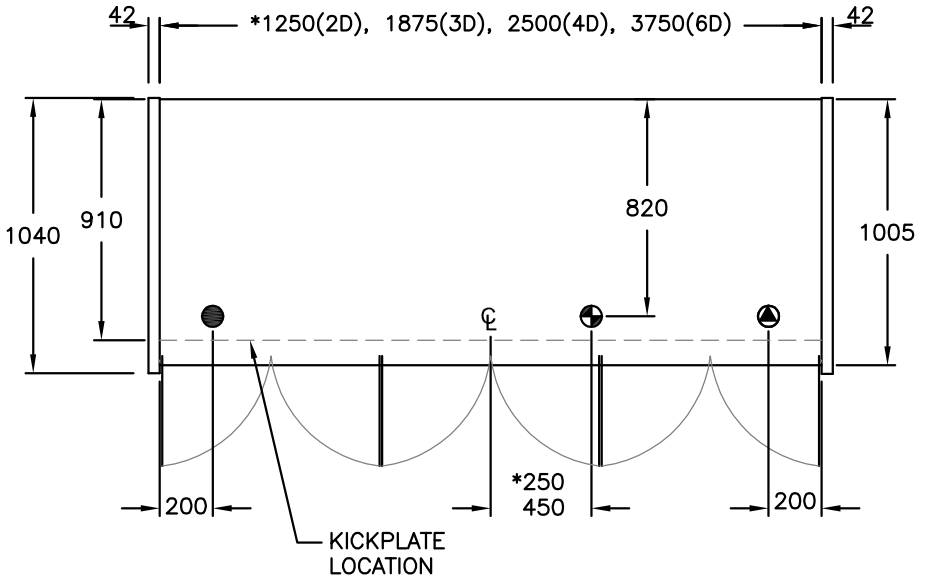

DRAIN
E ELECTRICAL
R REFRIGERATION

MODEL
MPD216

REFERENCE
MULTIDECK PRODUCE DOOR

JANUARY 2020