HUSSMANN

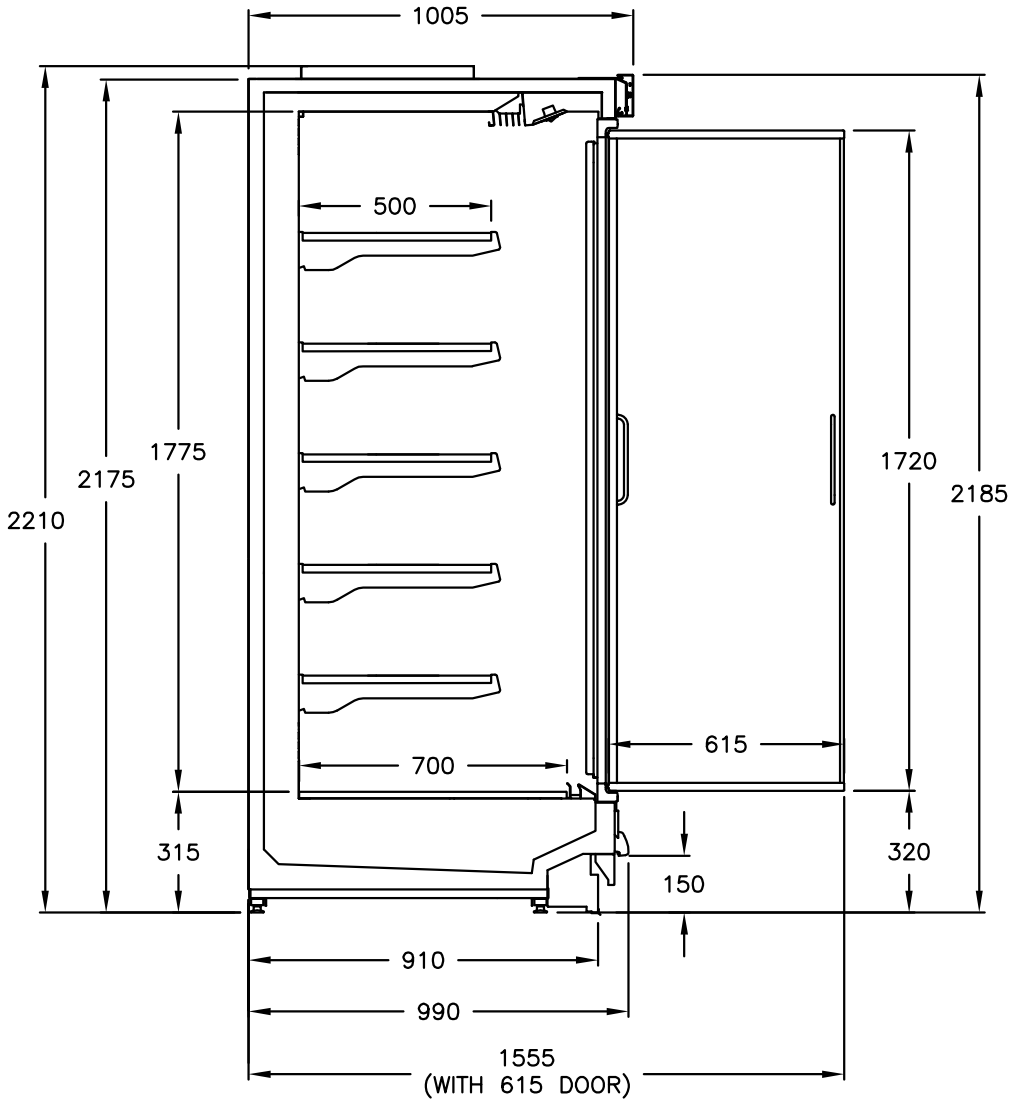

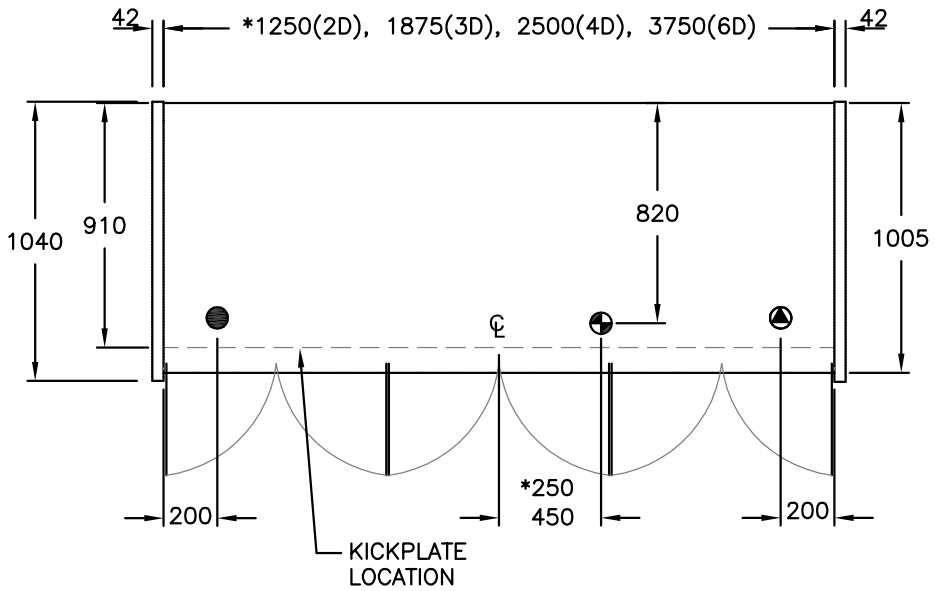

DRAIN
E ELECTRICAL
R REFRIGERATION

MODEL
MPD218

REFERENCE
MULTIDECK DOOR DAIRY

JANUARY 2020