MEAT

MPD316

MULTIDECK DOOR DEEP MEDIUM TEMPERATURE CABINET

ENHANCED ENERGY EFFICIENCY
& VERSATILITY

HUSSMANN®

*Image shown with fully frameless doors

PRODUCT BENEFITS

- Ergonomic design for easy access
- Alternative shelving layouts to optimise merchandising
- Optimised display with LED lighting
- Low Total Energy Consumption (TEC)
- Longer merchandise shelf life
- Product temperature compliance
- Simple to install and maintain
- Designed for modular configurations

STANDARD FEATURES

- Internal and external powder coating
- Single row of 3000K LED canopy lighting
- Provision for Mullion LED lights only no housing
- 4 rows of 600mm powder coated shelves
- Undershelf lighting 3000K
- Wire product fences 75mm
- Adjustable base wire tray with 115mm front
- Rear Mirror Kit
- Ticket strips
- Galvanised base
- Rubber bumper
- Evaporator assembly fitted with valve
- EC fan motors
- Digital thermometer display fitted
- Alarm probe fitted with conduit and draw wire
- Standard doors and handles

CUSTOMISATIONS

Shelving & Base Shelf

- Additional shelves and brackets
- Stainless steel reinforced shelving and base tray
- Hang sell and bar
- Wire or acrylic shelf fences (45mm, 75mm)

Lighting

- Standard lighting (3000K, 3300K, 4000K)
- Premium lighting available

Ends

- Solid mirror end / Glass view end
- Common end
- Acrylic full height system divider

Bumper

- Stainless steel bumper (single or double rail)

Other

- Fully Frameless Doors (as shown in render)
- Top mount piping
- Rear dress panels
- Valance panels - top or lower rear
- Stainless steel base liner
- Technology solutions
- Electronic shelf labels or video rail

Energy & Sustainability

- Ambient Fan Kit

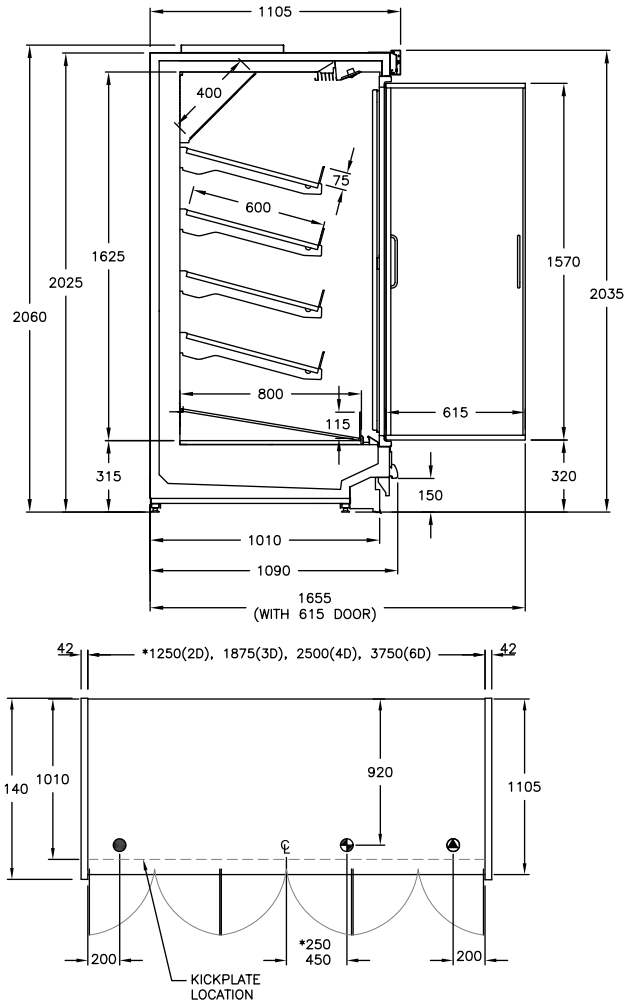

AVAILABLE LENGTHS

Excluding Ends: 1250, 1875, 2500, 3750
Crown Ends: 1875, 2115

TEMPERATURE CLASS

3M0

(-1˚C to +4˚C)

AVAILABLE DEPTHS

MPD116 - Narrow: 890
MPD216 - Standard: 990
MPD316 - Deep: 1090

AVAILABLE COLOURS

RAL9005 | GN150A | GL180A | GY070A | MW201T | GL205A

RAL9003 | RAL9010

Additional Information
All Dimensions shown in Millimetres (mm) unless otherwise stated. Dimensions and features are subject to change. Please obtain current technical information prior to order confirmation.

NOTE: We reserve the right to change or revise specifications and product design in connection with any feature of our products. Such changes do not entitle the buyer to corresponding changes, improvements, additions or replacements for equipment previously sold or Shipped.

© 2020 Hussmann Corporation - Version - V.1.0

McAlpine Hussmann
2-6 Niall Burgess Road, Mt Wellington, Auckland 1060, New Zealand
ph. +64 9526 6800
w. www.mcalpinehussmann.co.nz