HUSSMANN

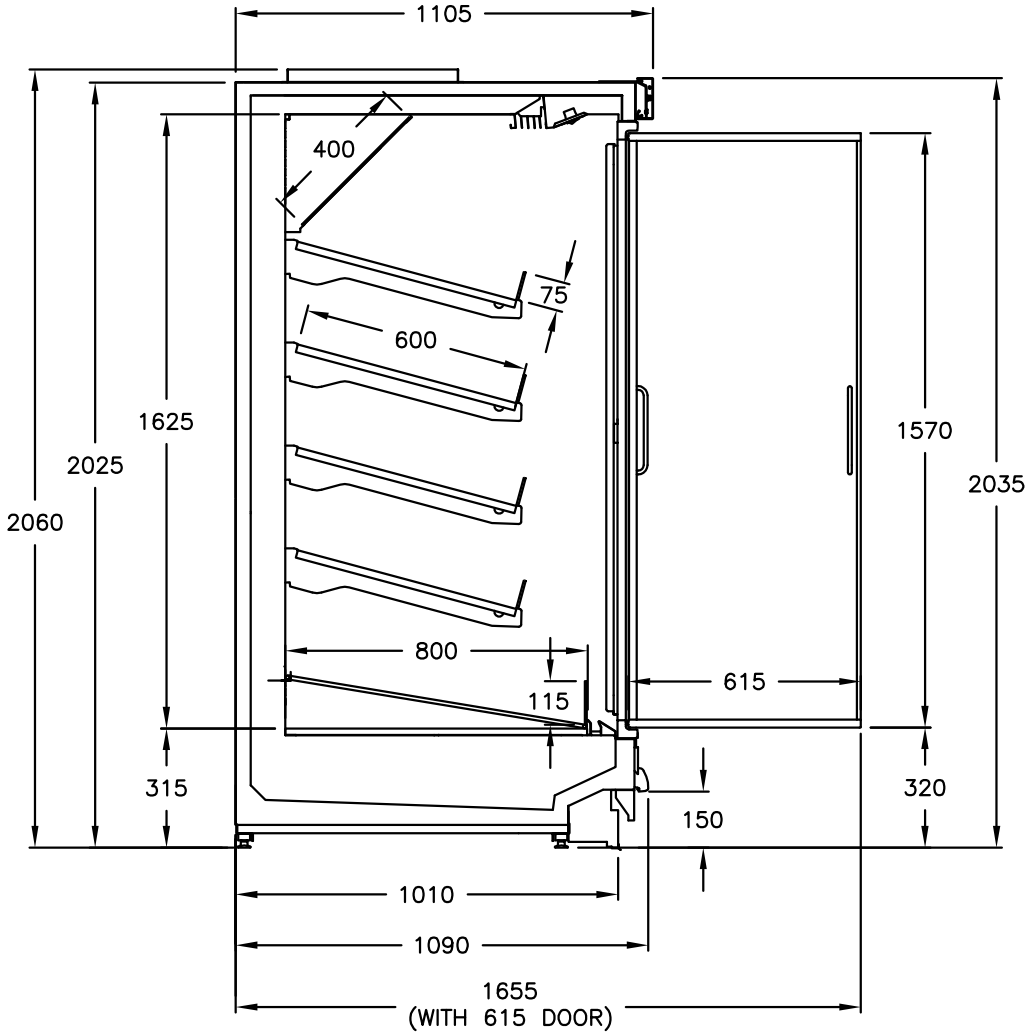

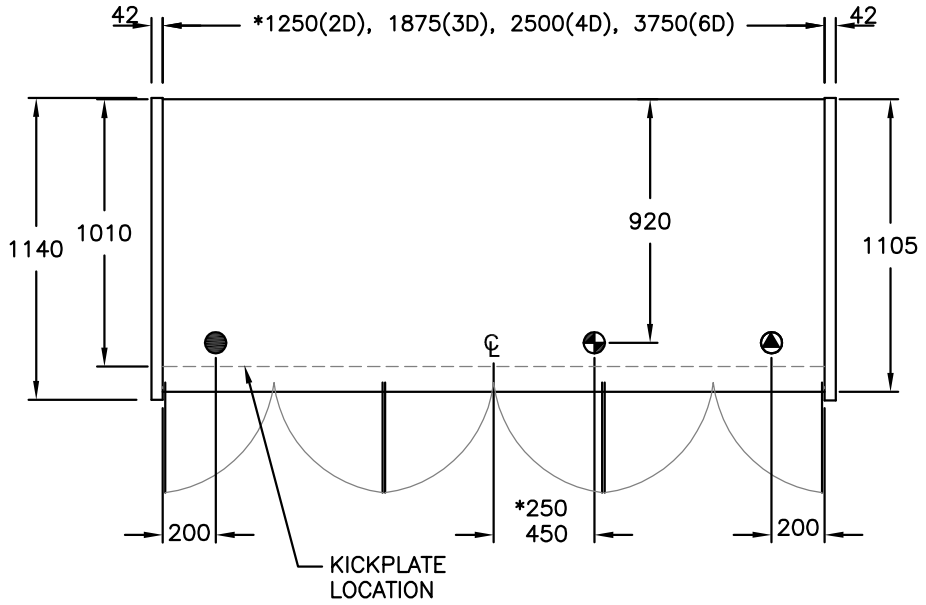

DRAIN
E ELECTRICAL
R REFRIGERATION

MODEL
MPD316

REFERENCE
MULTIDECK BAKERY DOOR

JANUARY 2020