HUSSMANN

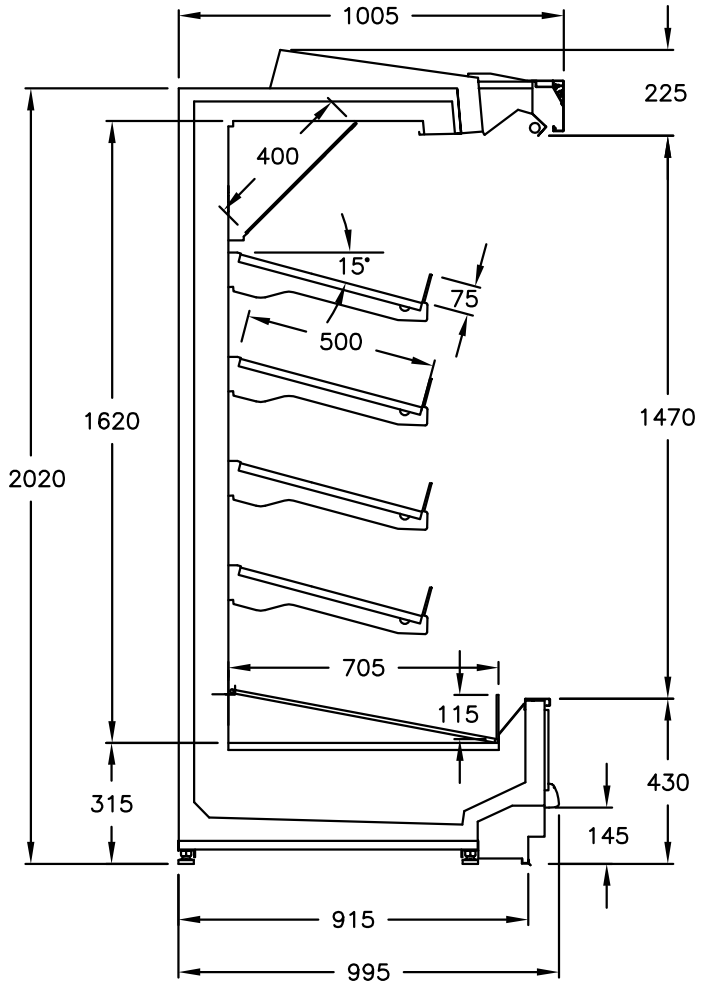

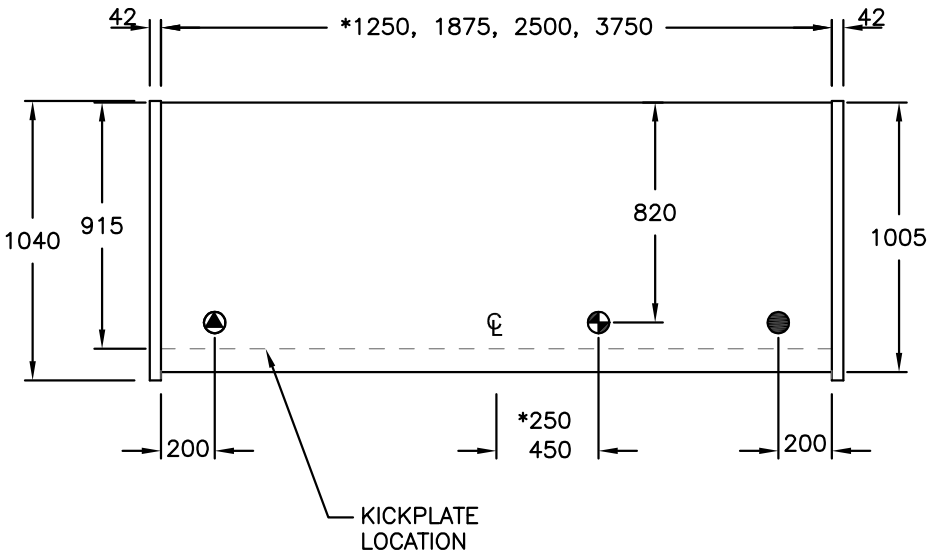

DRAIN
E ELECTRICAL
R REFRIGERATION

MODEL
MJPE226

REFERENCE
MULTIDECK MEAT

MAY 2020