HUSSMANN

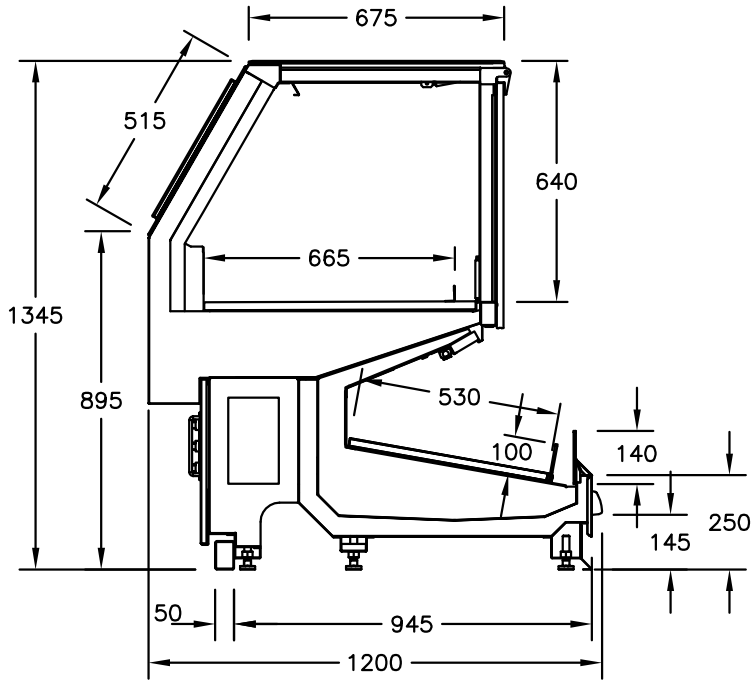

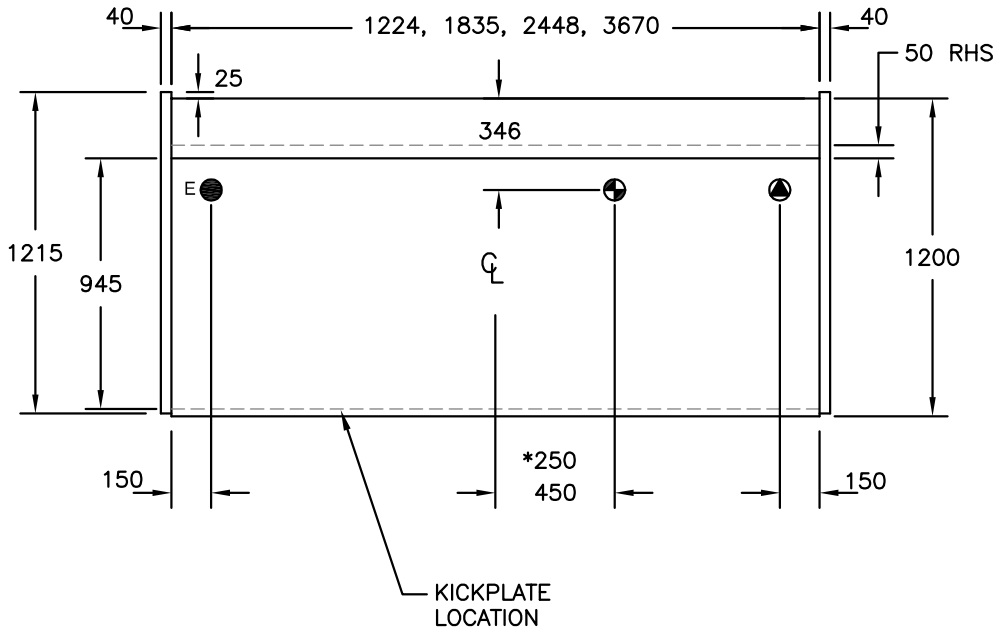

DRAIN
ELECTRICAL
REFRIGERATION

MODEL
CSD13

DESCRIPTION
CHILLED SELF SERVE OLIVE BAR - COMBINATION

JANUARY 2020